CAMPBELL HAUSFELD

# Contractor Air Compressors
# Compresseurs D'Air Pour Entrepreneurs
# Compresores de Aire Para Contratistas

**Replacement Parts List**
**Liste De Pièces De Rechange**
**Lista de Repuestos**

## VT613104, VT615206 & VT617204

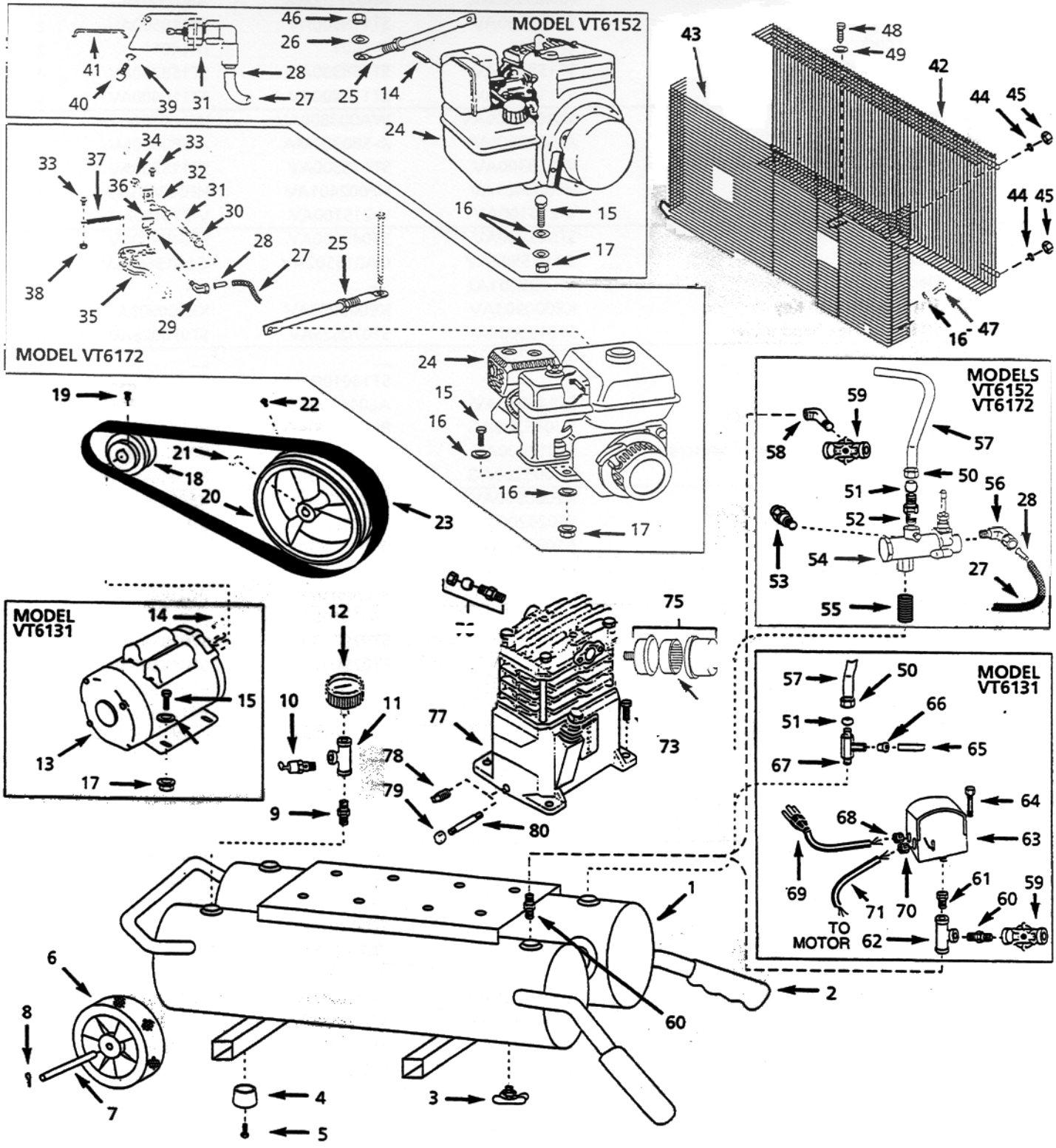

# For Replacement Parts, Call 1-800-543-8622

*Please provide following information:*
-Model number
-Serial number (if any)
-Part descriptions and number as shown in parts list

*Address parts correspondence to:*
Campbell Hausfeld
100 Production Drive
Harrison, OH 45030

| Ref. No. | Description | Part Number For Models: VT613104 | VT615206 | VT617204 | Qty |
|---|---|---|---|---|---|
| 1 | Tank | AR027200KK | AR027200KK | AR027200KK | 1 |
| 2 | Handle grip | ST118500AV | ST118500AV | ST118500AV | 2 |
| 3 | Drain cock | D-1401 | D-1401 | D-1401 | 2 |
| 4 | Rubber foot | ST158300AV | ST158300AV | ST158300AV | 4 |
| 5 | 10-24 x 3/4 Screw | ST116400AV | ST116400AV | ST116400AV | 4 |
| 6 | 10" Wheel | WA003800AV | WA003800AV | WA003800AV | 1 |
| 7 | Axle | A-580300MA | A-580300MA | A-580300MA | 1 |
| 8 | Cotter pin | ST118300AV | ST118300AV | ST118300AV | 2 |
| 9 | 1/4" Nipple | HF002401AV | HF002401AV | HF002401AV | 1 |
| 10 | ASME Safety valve | V-215100AV | V-215100AV | V-215100AV | 1 |
| 11 | 1/4" NPT T-connector | ST049900AV | ST049900AV | ST049900AV | 1 |
| 12 | Gauge | GA015502AV | GA015502AV | GA015502AV | 1 |
| 13 | Electric motor | MC035601AJ | — | — | 1 |
| 14 | 3/16" sq. x 11/4" Key | KE000903AV | KE000903AV | KE000903AV | 1 |
| 15 | 5/16" - 18 Hex head screw | ST016000AV | ST070625AV | ST070625AV | 4 |
| 16 | 5/16" Washer | ST011200AV | — | — | 7 |
| | | — | ST140100AV | ST011200AV | 11 |
| 17 | 5/16" - 18 Locknut | ST146000AV | AL014000AV | AL014000AV | 4 |
| 18 | Pulley | PU015300AG | PU015400AG | PU015400AG | 1 |
| 19 | 1/4" - 20 x 1/2" Square hd set screw | ST012200AV | ST012200AV | ST012200AV | 1 |
| 20 | Flywheel | PU005900AG | PU005900AG | PU005900AG | 1 |
| 21 | 3/16" Key | KE000900AV | KE000900AV | KE000900AV | 1 |
| 22 | 3/8" - 16 x 3/4 Setscrew | ST026200AV | ST026200AV | ST026200AV | 1 |
| 23 | Belt | BT023300AV | BT023300AV | BT023300AV | 1 |
| 24 | Gas engine | — | NG002300AV | NG002502AV | 1 |
| 25 | Brace assembly | — | BG208802AJ | BG208802AJ | 1 |
| 26 | 5/16" Washer | — | ST015100AV | — | 1 |
| 27 | 1/4" Unloader tube | — | ST079703AV | ST079703AV | 1 |
| 28 | Brass insert | — | ST079600AV | ST079600AV | 2 |
| 29 | 90° Compression connector | — | — | ST015500AV | 1 |
| 30 | Coupling | — | — | ST163001AV | 1 |
| 31 | Throw cylinder assembly | — | V-214801AJ | CV003500AV | 1 |
| 32 | Cylinder bracket | — | — | BG021100AV | 1 |
| 33 | M5 x .8 Screw | — | — | ST080702AV | 2 |
| 34 | 5/16-24 Nut | — | — | ST140200AV | 1 |
| 35 | Bracket | — | — | ‡ | 1 |
| 36 | Strike bracket | — | — | BG021000AV | 1 |
| 37 | Spring | — | — | ST080012AV | 1 |
| 38 | M5 Jam nut | — | — | ST076909AV | 1 |
| 39 | #10 Split washer | — | ST046400AV | — | 1 |
| 40 | 10-32 x 1/2" Hex head screw | — | ST070608AV | — | 1 |
| 41 | Throw cylinder rod | — | ST123501AV | — | 1 |
| 42 | Belt guard (front) | BG303700AV | BG218200AV | BG218200AV | 1 |
| 43 | Belt guard (back) | BG218300AV | BG218300AV | BG218300AV | 1 |
| 44 | #10 Flatwasher | ST070906AV | ST070906AV | ST070906AV | 4 |
| 45 | #10-24 Locknut | ST163200AV | ST163200AV | ST163200AV | 4 |

(†) Motor parts available from motor manufacturer.
(‡) Replacement parts for engine available from engine manufacturer.

# For Replacement Parts, Call 1-800-543-8622

*Please provide following information:*
-Model number
-Serial number (if any)
-Part descriptions and number as shown in parts list

*Address parts correspondence to:*
Campbell Hausfeld
100 Production Drive
Harrison, OH 45030

| Ref. No. | Description | Part Number For Models: VT613104 | VT615206 | VT617204 | Qty |
|---|---|---|---|---|---|
| 46 | 5/16 - 18 Locknut | — | ST146000AV | — | 1 |
| 47 | 5/16 - 12 x 3/4" Self-tapping screw | ST016500AV | ST016500AV | ST016500AV | 3 |
| 48 | 10-24 x 5/8" Self tapping screw | ST046500AV | ST046500AV | ST046500AV | 1 |
| 49 | #10 Spring washer | ST109003AV | ST109003AV | ST109003AV | 1 |
| 50 | Compression nut | ST033001AV | ST033001AV | ST033001AV | 1 |
| 51 | Ferrule | ST067300AV | ST067300AV | ST067300AV | 1 |
| 52 | Compression connector | — | ST072019AV | ST072019AV | 1 |
| 53 | Silencer | — | ST154900AV | ST154900AV | 1 |
| 54 | Load Genie | — | ST128402AV | ST128402AV | 1 |
| 55 | 1/2" x 2" Nipple | — | ST049200AV | ST049200AV | 1 |
| 56 | 90° Compression connector | — | ST015500AV | ST015500AV | 1 |
| 57 | Discharge tube | VT043000AP | VT043100AP | VT043100AP | 1 |
| 58 | 90° Street Ell 3/8 NPT | — | ST071212AV | ST071212AV | 1 |
| 59 | Globe valve | AV200000AV | AV200000AV | AV200000AV | 1 |
| 60 | 3/8"Nipple | HF002600AV | — | — | 2 |
| | | — | HF002600AV | HF002600AV | 1 |
| 61 | Reducer | ST006400AV | | | 1 |
| 62 | 3/8" NPT T-connector | ST070406AV | — | — | |
| 63 | Pressure switch | CW207532AV | — | — | |
| 64 | Unloader valve | CW000100AV | — | — | 1 |
| 65 | Unloader tube | ST117804AV | — | — | 1 |
| 66 | Push-in fitting | ST081301AV | — | — | 1 |
| 67 | Check valve | CV220301AJ | — | — | 1 |
| 68 | Strain relief (Power cord) | ST043200AV | — | — | 1 |
| 69 | Power cord with plug | EC002104AV | — | — | 1 |
| 70 | Strain relief (Motor cord) | ST043200AV | — | — | 1 |
| 71 | Motor cord | EC008001AV | — | — | 1 |
| 73 | 5/16-12 x 1-1/4" Self-tapping Screw | ST073249AV | ST073249AV | ST073249AV | 4 |
| 74 | Filter element | ST073916AV | ST073916AV | ST073916AV | 1 |
| 75 | Filter assembly | ST073915AV | ST073915AV | ST073915AV | 1 |
| 76 | Compression assembly | ST018300AV | ST018300AV | ST018300AV | 1 |
| 77 | Pump | VT470200KB | VT470000KB | VT470000KB | 1 |
| 78 | 1/8 - 27 Oil drain plug | ST022300AV | ST022300AV | ST022300AV | 1 |
| 79 | Oil drain cap | ST150100AV | ST150100AV | ST150100AV | 1 |
| 80 | Oil drain extension | ST149100AV | ST149100AV | ST149100AV | 1 |

# Para ordenar repuestos, llame al 1-800-543-8622

*Sírvase darnos la siguiente información:*
-Número del modelo
-Número de Serie (de haberlo)
-Descripción y número del repuesto según la lista de repuestos

*Puede escribirnos a:*
Campbell Hausfeld
100 Production Drive
Harrison, OH 45030

| No. de Ref. | Descripción | Repuestos para los modelos: VT613104 | VT615206 | VT617204 | Ctd. |
|---|---|---|---|---|---|
| 1 | Tanque | AR027200KK | AR027200KK | AR027200KK | 1 |
| 2 | Mango | ST118500AV | ST118500AV | ST118500AV | 2 |
| 3 | Llave de salida | D-1401 | D-1401 | D-1401 | 2 |
| 4 | Pata de goma | ST158300AV | ST158300AV | ST158300AV | 4 |
| 5 | Tornillo de 10-24 x 3/4 | ST116400AV | ST116400AV | ST116400AV | 4 |
| 6 | Rueda de 10" | WA003800AV | WA003800AV | WA003800AV | 1 |
| 7 | Eje | A-580300MA | A-580300MA | A-580300MA | 1 |
| 8 | Pasador | ST118300AV | ST118300AV | ST118300AV | 2 |
| 9 | Niple de 1/4" (6,3mm) | HF002401AV | HF002401AV | HF002401AV | 1 |
| 10 | Válvula de seguridad ASME | V-215100AV | V-215100AV | V-215100AV | 1 |
| 11 | Conector en T de 1/4" NPT | ST049900AV | ST049900AV | ST049900AV | 1 |
| 12 | Manómetro | GA015502AV | GA015502AV | GA015502AV | 1 |
| 13 | Motor eléctrico | MC035601AJ | — | — | 1 |
| 14 | Chaveta de 3/16" x 11/4" | KE000903AV | KE000903AV | KE000903AV | 1 |
| 15 | Tornillo Hex. de 5/16" - 18 | ST016000AV | ST070625AV | ST070625AV | 4 |
| 16 | Arandela de 5/16" | ST011200AV | — | — | 7 |
| | | — | ST140100AV | ST011200AV | 11 |
| 17 | Tuerca de seguridad de 5/16" - 18 | ST146000AV | AL014000AV | AL014000AV | 4 |
| 18 | Polea | PU015300AG | PU015400AG | PU015400AG | 1 |
| 19 | Tornillo de 1/4" - 20 x 1/2" | ST012200AV | ST012200AV | ST012200AV | 1 |
| 20 | Volante | PU005900AG | PU005900AG | PU005900AG | 1 |
| 21 | Chaveta de 3/16" | KE000900AV | KE000900AV | KE000900AV | 1 |
| 22 | Tornillo de 3/8" - 16 x 3/4 | ST026200AV | ST026200AV | ST026200AV | 1 |
| 23 | Banda | BT023300AV | BT023300AV | BT023300AV | 1 |
| 24 | Motor de gasolina | — | NG002300AV | NG002502AV | 1 |
| 25 | Abrazadera | — | BG208802AJ | BG208802AJ | 1 |
| 26 | Arandela 5/16" | — | ST015100AV | — | 1 |
| 27 | Tubo de desfogue de 1/4" | — | ST079703AV | ST079703AV | 1 |
| 28 | Encastre de bronce | — | ST079600AV | ST079600AV | 2 |
| 29 | Conector de compresión de 90° | — | — | ST015500AV | 1 |
| 30 | Acoplador | — | — | ST163001AV | 1 |
| 31 | Ensamblaje del cilindro de carrera | — | V-214801AJ | CV003500AV | 1 |
| 32 | Abrazadera para el cilindro | — | — | BG021100AV | 1 |
| 33 | Tornillo M5 x .8 | — | — | ST080702AV | 2 |
| 34 | Tuerca de 5/16-24 | — | — | ST140200AV | 1 |
| 35 | Abrazadera | — | — | ‡ | 1 |
| 36 | Abrazadera | — | — | BG021000AV | 1 |
| 37 | Resorte | — | — | ST080012AV | 1 |
| 38 | Tuerca M5 | — | — | ST076909AV | 1 |
| 39 | Arandela abierta #10 | — | ST046400AV | — | 1 |
| 40 | Tornillo Hex de 10-32 x 1/2" | — | ST070608AV | — | 1 |
| 41 | Eje del cilindro de carrera | — | ST123501AV | — | 1 |
| 42 | Tapa protectora de bandas (frontal) | BG303700AV | BG218200AV | BG218200AV | 1 |
| 43 | Tapa protectora de bandas (posterior) | BG218300AV | BG218300AV | BG218300AV | 1 |
| 44 | Arandela plana #10 | ST070906AV | ST070906AV | ST070906AV | 4 |
| 45 | Tuerca de seguridad #10-24 | ST163200AV | ST163200AV | ST163200AV | 4 |

(†) Para ordenar las piezas del motor debe comunicarse con el fabricante.
(‡) Para ordenar las piezas del motor de gasolina debe comunicarse con el fabricante.

# Para ordenar repuestos, llame al 1-800-543-8622

*Sírvase darnos la siguiente información:*
-Número del modelo
-Número de Serie (de haberlo)
-Descripción y número del repuesto según la lista de repuestos

*Puede escribirnos a:*
Campbell Hausfeld
100 Production Drive
Harrison, OH 45030

| No. de Ref. | Descripción | Repuestos para los modelos: VT613104 | VT615206 | VT617204 | Ctd. |
|---|---|---|---|---|---|
| 46 | Tuerca de seguridad de 5/16 - 18 | — | ST146000AV | — | 1 |
| 47 | Tornillo autorroscante de 5/16 - 12 x 3/4" | ST016500AV | ST016500AV | ST016500AV | 3 |
| 48 | Tornillo autorroscante de 10-24 x 5/8" | ST046500AV | ST046500AV | ST046500AV | 1 |
| 49 | Arandela elástica #10 | ST109003AV | ST109003AV | ST109003AV | 1 |
| 50 | Tuerca de compresión | ST033001AV | ST033001AV | ST033001AV | 1 |
| 51 | Tapa de compresión | ST067300AV | ST067300AV | ST067300AV | 1 |
| 52 | Conector de compresión | — | ST072019AV | ST072019AV | 1 |
| 53 | Silenciador | — | ST154900AV | ST154900AV | 1 |
| 54 | Llave de entrada Genie | — | ST128402AV | ST128402AV | 1 |
| 55 | Niple de 1/2" x 2" | — | ST049200AV | ST049200AV | 1 |
| 56 | Conector de compresión de 90° | — | ST015500AV | ST015500AV | 1 |
| 57 | Tubo de desfogue | VT043000AP | VT043100AP | VT043100AP | 1 |
| 58 | Conector de 90° 3/8 NPT | — | ST071212AV | ST071212AV | 1 |
| 59 | Válvula de globo | AV200000AV | AV200000AV | AV200000AV | 1 |
| 60 | Niple de 3/8" | HF002600AV | — | — | 2 |
| | | — | HF002600AV | HF002600AV | 1 |
| 61 | Reductor | ST006400AV | — | — | 1 |
| 62 | Conector en T de 3/8" NPT | ST070406AV | — | — | 1 |
| 63 | Presostato | CW207532AV | — | — | |
| 64 | Válvula de desfogue | CW000100AV | — | — | 1 |
| 65 | Tubo de desfogue | ST117804AV | — | — | 1 |
| 66 | Ajuste de empuje | ST081301AV | — | — | 1 |
| 67 | Válvula de chequeo | CV220301AJ | — | — | 1 |
| 68 | Relevo de tensión (Cordón eléctrico) | ST043200AV | — | — | 1 |
| 69 | Cordón eléctrico con enchufe | EC002104AV | — | — | 1 |
| 70 | Relevo de tensión (Cordón del motor) | ST043200AV | — | — | 1 |
| 71 | Cordón del motor | EC008001AV | — | — | 1 |
| 73 | Tornillo autorroscante de 5/16-12 x 1-1/4" | ST073249AV | ST073249AV | ST073249AV | 4 |
| 74 | Elemento del filtro | ST073916AV | ST073916AV | ST073916AV | 1 |
| 75 | Filtro | ST073915AV | ST073915AV | ST073915AV | 1 |
| 76 | Ensamblaje de compresión | ST018300AV | ST018300AV | ST018300AV | 1 |
| 77 | Cabezal | VT470200KB | VT470000KB | VT470000KB | 1 |
| 78 | Tapón de 1/8 - 27 para el drenaje de aceite | ST022300AV | ST022300AV | ST022300AV | 1 |
| 79 | Tapa del drenaje de aceite | ST150100AV | ST150100AV | ST150100AV | 1 |
| 80 | Extensión del drenaje de aceite | ST149100AV | ST149100AV | ST149100AV | 1 |